ALT.NO	ALT.DATE	ZONE	ALTERATIONS	AUTHORITY
NIL	NIL	NIL	NIL	NIL

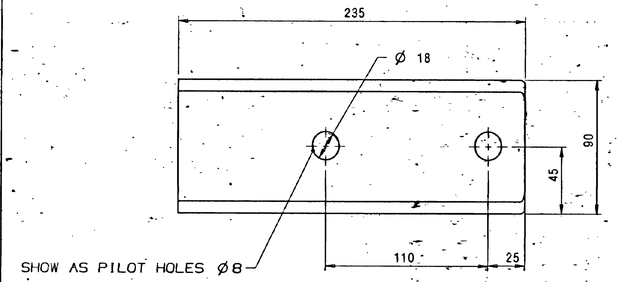

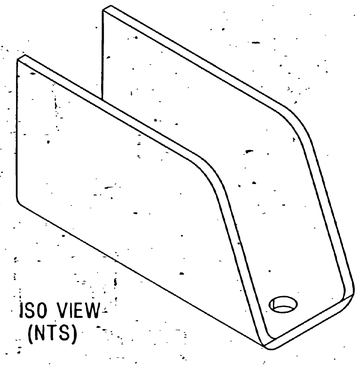

ISO VIEW
(NTS)

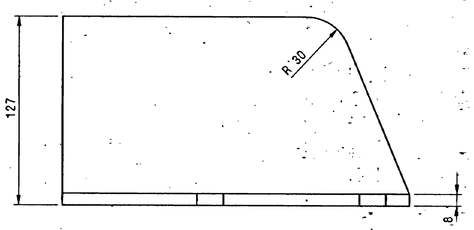

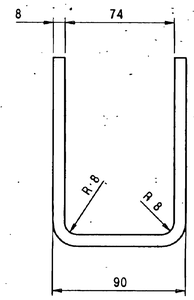

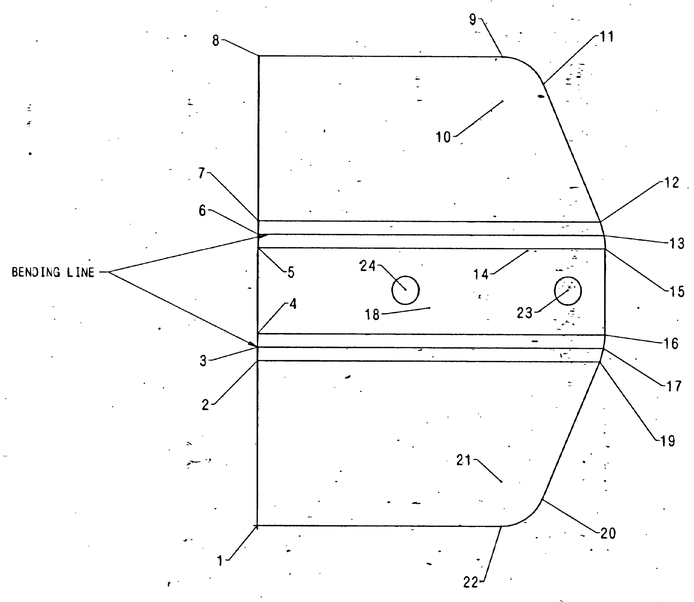

DEVLOPED VIEW

S.NO	X COORD	Y COORD
1	0.000	0.000
2	0.000	111.000
3	0.000	120.048
4	0.000	129.096
5	0.000	187.096
6	0.000	196.143
7	0.000	205.191
8	0.000	316.191
9	165.064	316.191
10	165.064	286.191
11	192.722	297.812
12	231.639	205.191
13	234.015	196.143
14	182.427	185.593
15	235.000	187.096
16	235.000	129.096
17	234.015	120.048
18	116.179	146.868
19	231.639	111.000
20	192.722	18.379
21	165.064	30.000
22	165.064	0.000
23	210.000	159.096
24	100.000	159.096

Entered
Into
Date Bar
20 JUL 2004

NIL	CHANNEL 8X235X316	NIL	R101501008	IRS M41-97	NIL
ITEM	DESCRIPTION & DIMENSIONS	QPASSLY	DETAIL DRG	MATL. & SPEC.	REMARKS
GROUP	BOGIE FRAME ARRGT.	SUPERSEDES:	NIL		
FILE	\\Nas\bogie\assly\16t_bog_drg\em\em03122.prt(3D)				

WELD LENGTH: NIL M
WEIGHT: 4.270 KG
S.AREA: 0.145 M²
~~LENGTH/DIA~~: NIL M
~~WIDTH/THICK.~~: NIL M
HEIGHT: NIL M

CHANNEL FOR AIR SPRING TYPE
SHOCK ABSORBER BRACKET ASSLY.
FOR L.S. BEAM

RAIL COACH FACTORY, KAPURTHALA

INDIAN RAILWAYS STANDARD

SCALE: 1:2 | SSE/REC | CHD | DRN | REF.DRG.No. NIL

PL NO. NIL
DRG.NO. EM03122
ALT. NIL | SIZE A1 | SHEET 1/1

ADE/SME | CME | CDE

ANY MANUAL ALTERATION SHALL AUTOMATICALLY RENDER THIS DRAWING INVALID.
FOR UNTOLERANCED DIMENSIONS REFER MDG0008

DETAIL DRGS STARTING WITH "LI" ARE INTERNAL REFERENCE LISTS ONLY AND ARE NOT FOR ISSUE.

DATE OF FIRST ISSUE 14/05/2004 CGM BY Raj